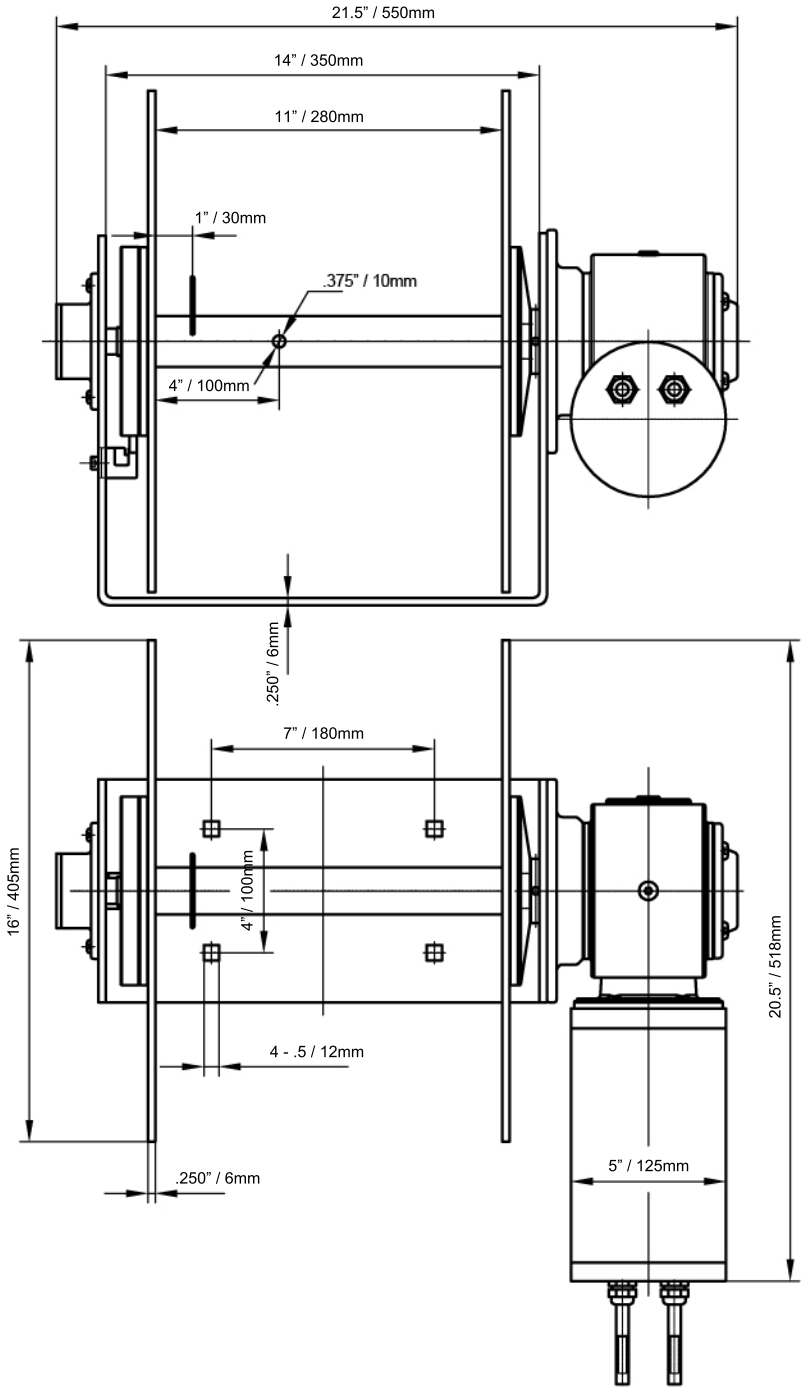
21.5" / 550mm
14" / 350mm
11" / 280mm
1" / 30mm
.375" / 10mm
4" / 100mm
.250" / 6mm
7" / 180mm
16" / 405mm
4" / 100mm
20.5" / 518mm
4 - .5 / 12mm
.250" / 6mm
5" / 125mm

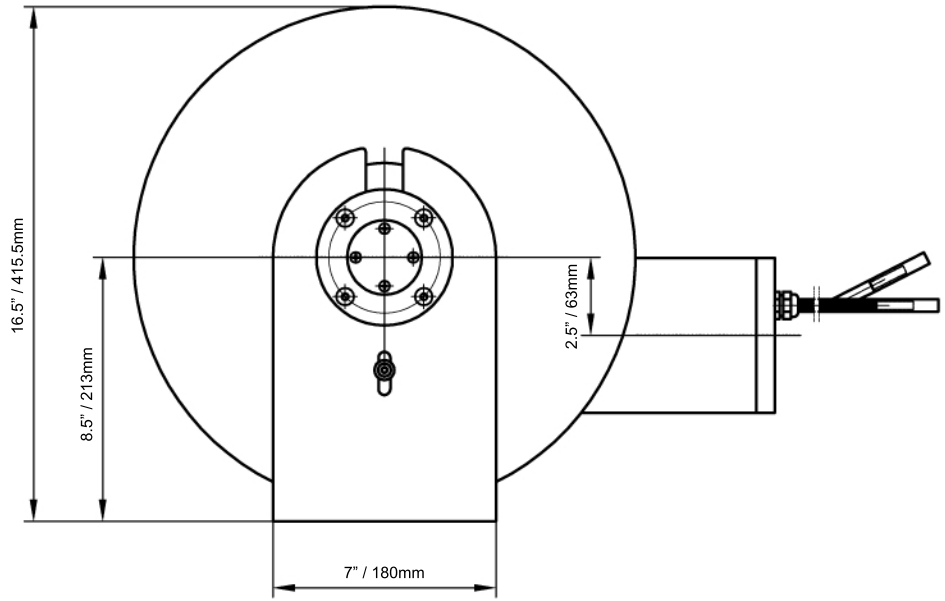
16.5" / 415.5mm
8.5" / 213mm
2.5" / 63mm
7" / 180mm